DPC-64 Data Encoder/Decoder

The DPC-64 data packet controller or data encoder/decoder is similar in operation to the DPC-2400 encoder/decoder. Suitable for half duplex bi-directional communications, interfacing the DPC-64 with any of ABACOM's transceiver modules such as the BIM-4xx-F, RTF/L-DATA-SAW, AM-RTD-315 etc. and a host microcontroller or computer removes the burden of creating your own firmware/software to perform the necessary data formatting required for reliable wireless communications.
The DPC-64 reduces design time — significantly!

The DPC-64 permits data frames of up to 64 bytes to be transmitted at a time. If more than 64 bytes is required, then the busy control line is available to signal the host to pause the data stream until the DPC is ready to continue. Simply input your raw serial data (in the standard format of 1 start bit, 8 data bits and 1 stop bit) and the DPC does the rest—it adds the required preamble, sync., header, it Manchester encodes your data, performs a CRC, it decodes at the receiving end and reproduces your original transmitted data.

FEATURES

- **Transparent data formatting**
- **Processes 1 to 64 byte data packets at a time (ie per transmission)**
- **Optional Handshaking lines included to transceive more than 64bytes**
- **Convenient Test Transmission Mode for diagnostic purposes**
- **1200, 2400,4800 or 9600 8,N,1 protocol compatible**
- **Simple to interface to host and RF transceiver modules**
- **Significantly reduces design time**

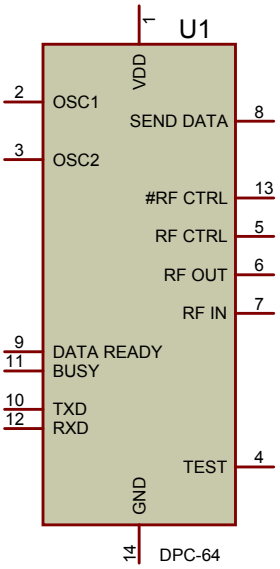

Pin Number	Description
1	+5V supply
2, 3	External Crystal Oscillator: 2MHz –1200bps 4MHz –2400bps; 8MHz– 4800bps; 16MHz-9600bps
4	Test - active low transmits 64 byte preset message
5	Logic control line for the RF module
6	Encoded data output to RF transceiver data input
7	Encoded data input from RF transceiver data output
8	Send data - control line from receiving host. Active High.
9	Data ready - signals host that data is ready to upload
10	Decoded Data output to host data input
11	Control line to transmitting host. Active High.
12	Data input from host
13	Complimentary logic control for the RF module
14	Ground

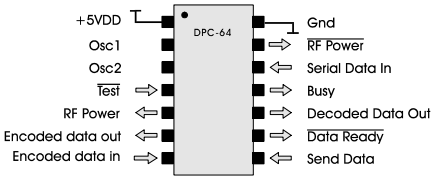

ABACOM Technologies, Inc. • 383 Bering Ave • Etobicoke • ON • M8Z 3B1 • Tel +1(416)236-3858 • Fax +1(416)236-8866
www.abacom-tech.com

Detailed Pin Description

Pin 1– +5V Supply

This pin should be decoupled to ground with a 0.1uF capacitor.

Pins 2 & 3-External Oscillator

The value of the external crystal used will determine the data rate configuration of the DPC-64. Crystal values of 2, 4, 8, and 16MHz will configure the DPC-64 for 1200, 2400, 4800 and 9600bps operation respectively. In addition to the crystal connected to these pins, a 22pF ceramic capacitor should be connected from each pin to ground.

Pin 4– Test

This pin is internally pulled high via an internal pull-up resistor. When taken low, typically via a tactile feedback pushbutton switch or any other dry contact, the data input pin 12 will be ignored and a 64 byte internal message will be output on pin 6. The content of this test message will be:

<ABACOM Technologies> DPC-64 www.abacom-tech.com +1(416)236-3858

The test message is intended for diagnostic purposes and serves as a quick test to verify the integrity of the RF link. With a receiving host PC running a simple terminal program such as Hyperterminal configured for xx00,8,N,1 the content of the test message in a correctly configured RF wireless link will be displayed.

Pin 5– Control Logic

This pin can source or sink 25mA max. and can be used to enable or power the transmitter section of the transceiver module being interfaced. As examples this pin would connect to:

pin 8 - RTL/F-DATA-SAW transceiver modules
pin 16 - BIM-4xx-F, ATRT100, and QTRC1 transceiver modules
pin 3 - ATXR-433-ULC transceiver modules

In the DPC-64's quiescent state this pin is low (0V) keeping the transmit section off. Once the DPC-64 has received data from the host and is ready to transmit, pin 5 will go high (+5V) turning the transmitter on so the data output at pin 6 can be transmitted over the air. Whatever the state is of pin 5, its complement will be present on the second logic control pin 13.

Pin 6– Encoded Data Output

Data received at pin 12 (Data IN) from transmitting host is encoded by the DPC-64 and fed out to the data input pin of the transmitter section of the transceiver via pin 6. For this to occur, the send data control line, pin 8, must be also be at a high level.

Pin 7– Encoded Data Input

The data output of the transceiver module will connect to the encoded data input pin 7 of the DPC-64. Valid received encoded data entering the DPC-64 at pin 7 will be decoded by the DPC-64 and the original data from the transmitting host will be recovered and made available for output at the DPC-64 decoded data output pin 10.

Pin 8 – Send Data

The send data control line is active high. When taken high, the data received from the transmitting host will be released to the encoded data output pin 6. If held low, the data received from the host will be held in the DPC-64's buffer until "send data" is taken high. The send data line functions in association with the data ready pin 9.

Pin 9– Data Ready

When the receiving DPC-64 has received valid data, the data ready control line may be used to signal the receiving host that the DPC-64 has valid data ready to upload. The receiving host then asserts a logic high level on the "send data" line at pin 8 and the data is uploaded.

Many applications that require the received data from the DPC-64 to be uploaded to the host without supervision, do not require interfacing the data ready control line. For these applications, the data ready pin 9 may be left unconnected and the send data pin 8 then simply tied high. In this configuration, the decoded data will upload to the host upon receipt.

Pin 10– Decoded Data Output

Encoded data that has been received by the DPC-64 from the transceiver's data output will be decoded by the DPC-64 and the original data that was sent from the transmitting host will be reproduced at the decoded data output pin 10. This original data will be flow out of pin 10 on condition that the send data control pin 8 is high. If the control line is low, the data output will be inhibited.

Pin 11– Busy Line

The busy line goes high when the DPC-64 is busy passing data received from the host to its the encoded data output for RF wireless transmission. This line goes high either when the DPC-64 has received its maximum of 64 bytes or when it has detected the end of incoming data (under conditions when < 64 bytes have been received from the host).

The function of the busy line pin 11 is for data flow control with the host. Implementing the busy line is necessary in applications where more than 64 bytes are to be transmitted. Under these circumstances, the DPC-64 will receive the first 64 bytes of data, and then use the busy line to signal the host to pause sending further data until it is ready to receive the next bytes of data.

If the DPC-64 is connected to the COM port of a PC for example, the busy line should be connected to the CTS flow control line (pin 8 of the DB9 connector) via and RS 232 level converter such as the MAX232. The remaining flow control lines on the DB9 connector can be looped back on the connector (ie link DSR pin 4 and DTR pin 6). The terminal software interface being used should have hardware flow control active).

Pin 12 – Data Input

Serial data from the host to be encoded and transmitted by the DPC-64 is input on pin 12. The DPC-64 data input is expecting data from the host's UART via an RS232 level translator IC such as the MAX232. Besides level translating, these IC's also invert the data and therefore the serial data entering at pin 12 should be inverted serial data. The DPC-64 is expecting to see a logic 0 start bit.
In some applications such as interfacing the DPC-64 to a microcontrollar host where the serial data is not inverted and for whatever reason cannot be inverted from within the microcontroller, then an external inverter will be required between the host and the DPC-64 encoder/decoder.

In the absence of serial data, pin 12 must be in a high state.

The serial data in must be at the same data rate as the DPC-64 is configured for.

Pin 13 – Control Logic

As with pin 5, pin 13 may be used to power or control the transceiver, or more specifically the receive section. In its quiescent state pin 13 is at a high level and is always the complement of pin 5. Pin 13 can source or sink up to 25mA and can therefore be used as power supply line for most of ABACOM's transmitter, receiver and transceiver modules. As examples this pin would connect to:

pin 25 - RTL/F-DATA-SAW transceiver modules
pin 15 - BIM-4xx-F, ATRT100, and X2010 transceiver modules
pins 20,25 - ATXR-433-ULC transceiver modules

Pin 14– Ground

Connect to supply ground

DPC-64 Pin Assignment

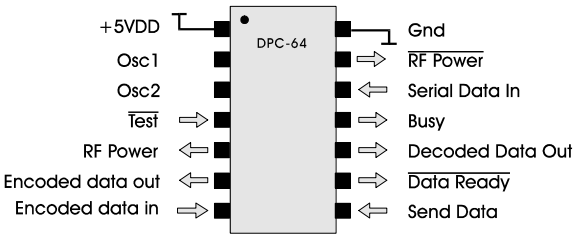

Typical System Block Diagram

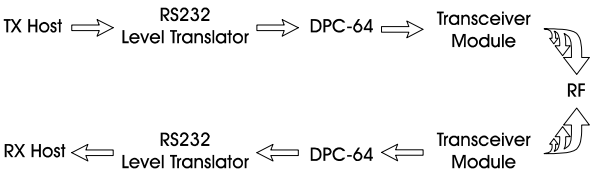

Timing Diagrams

DPC-64 Timing Diagram (encode side)

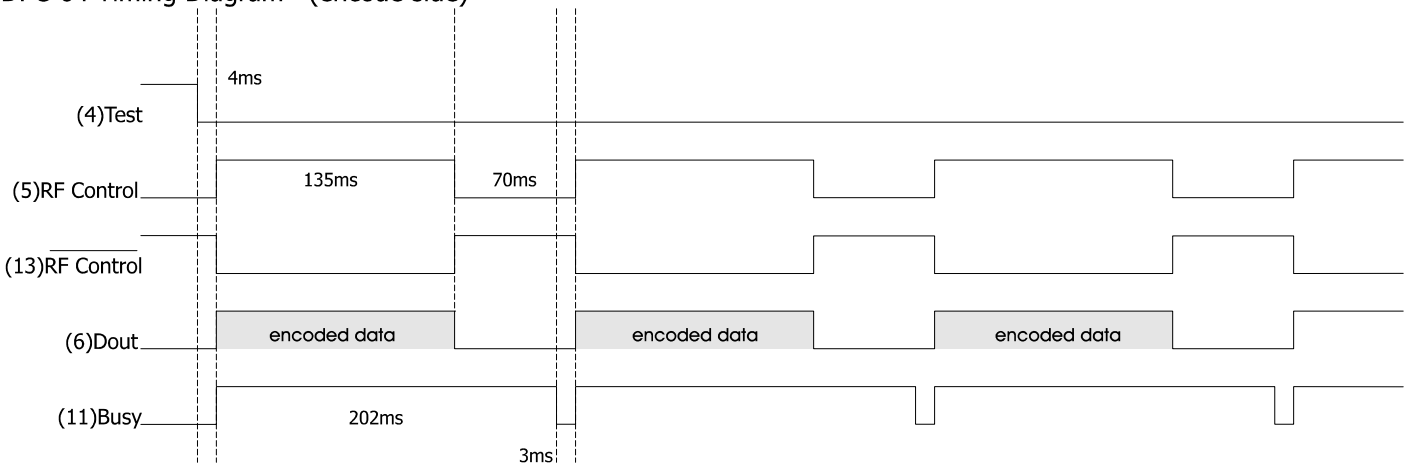

DPC-64 Timing Diagram (decode side)

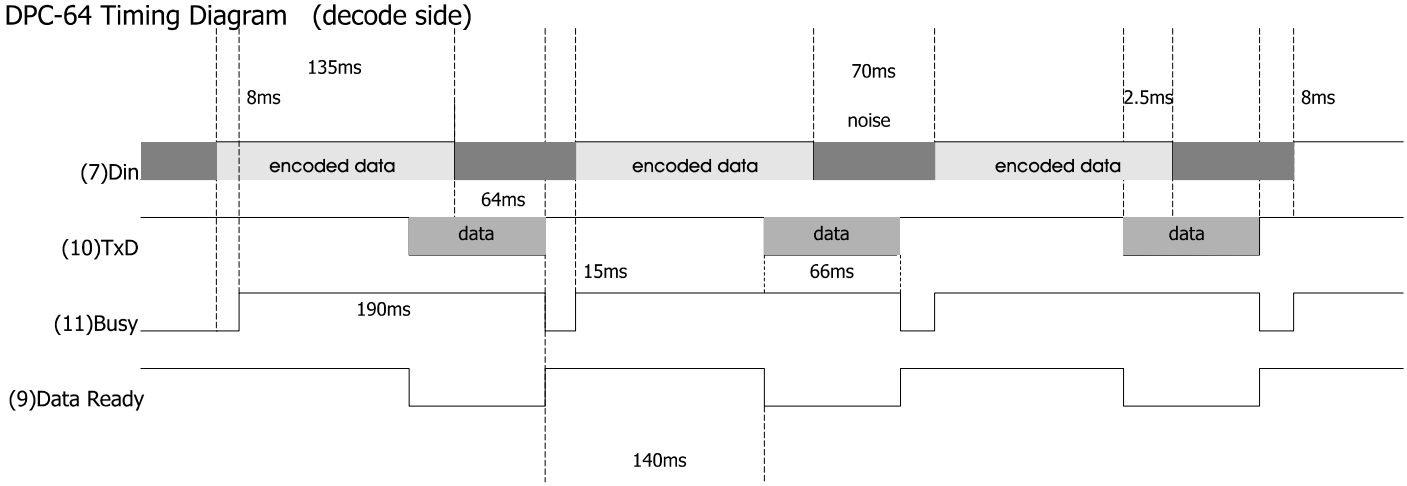

Note:The timing diagrams are based on the DPC-64 configured for 9600bps using a 16MHz crystal.

Disclaimer:
Technical specifications are subject to change without notice. The information contained in this document is provided in good faith. Whilst every effort has been made to ensure its accuracy, ABACOM Technologies do not assume responsibility for any errors or omissions that may exist. ABACOM Technologies does not assume responsibility for any damage caused through misuse of their products. ABACOM Technologies products are not recommended for applications where human life may be at risk.